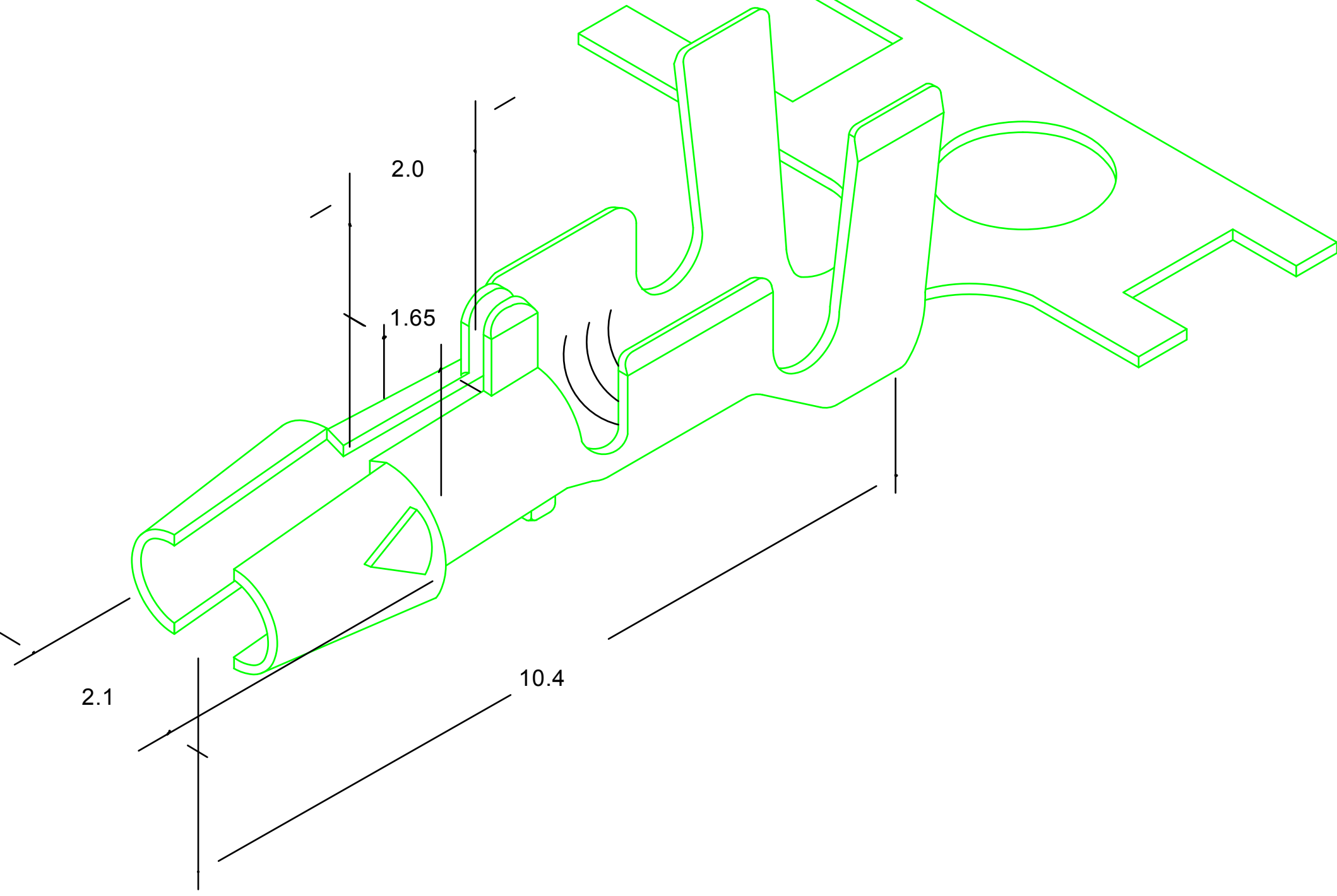

						10/1		