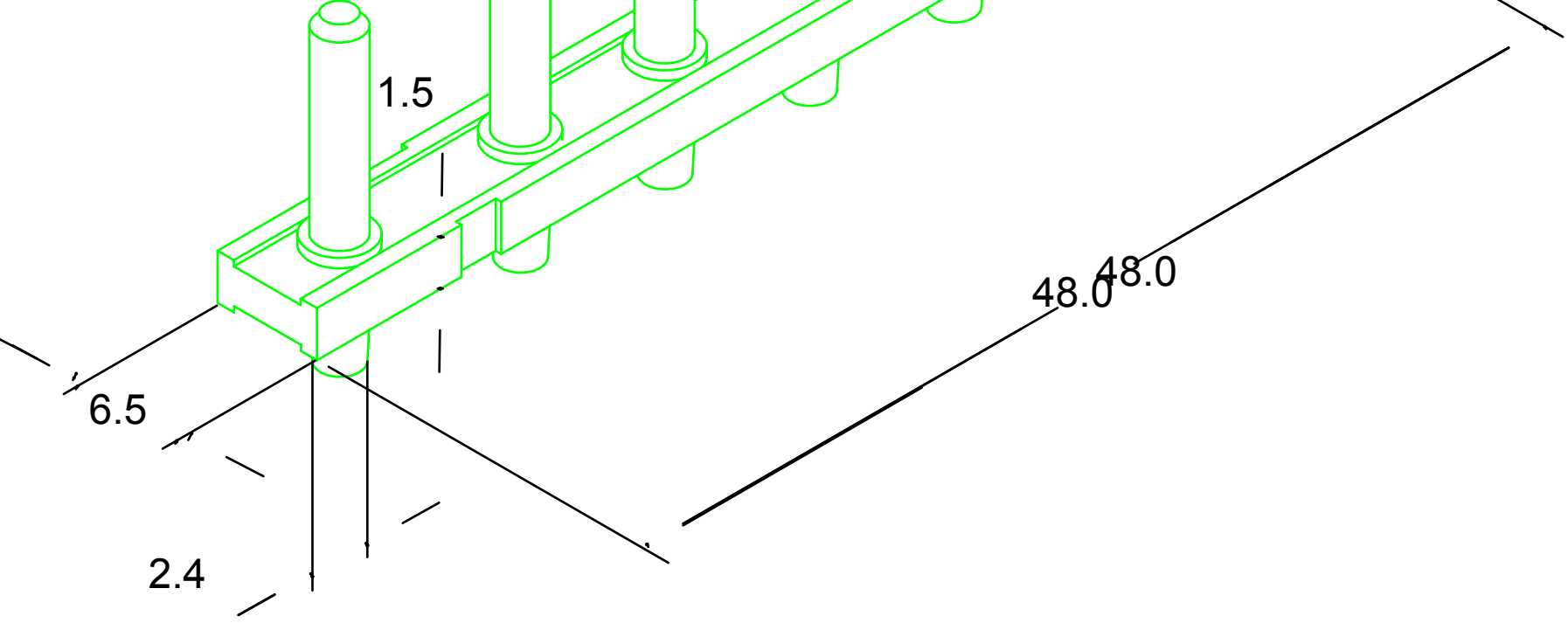


2.5 / 1

1081